QUESTTEL
Broadcast Systems

1 Channel Video and IP Over Fiber Extender Kit with RS485 Data

User Manual

L-1VID-1IP-FE-TX-RX

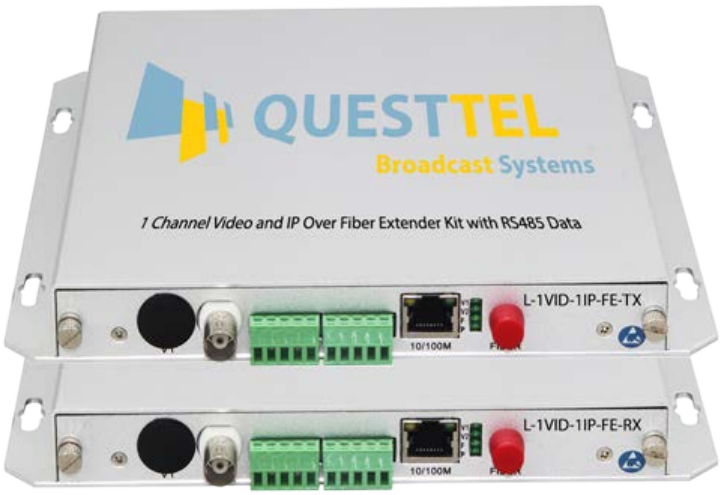

Application Drawing

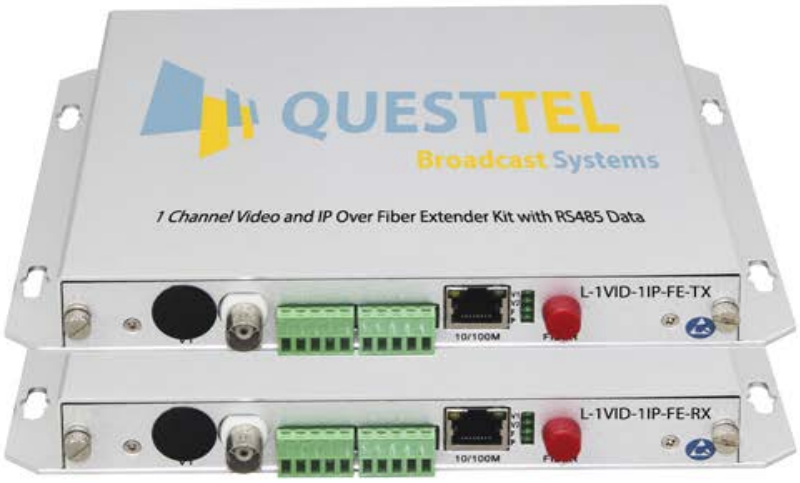

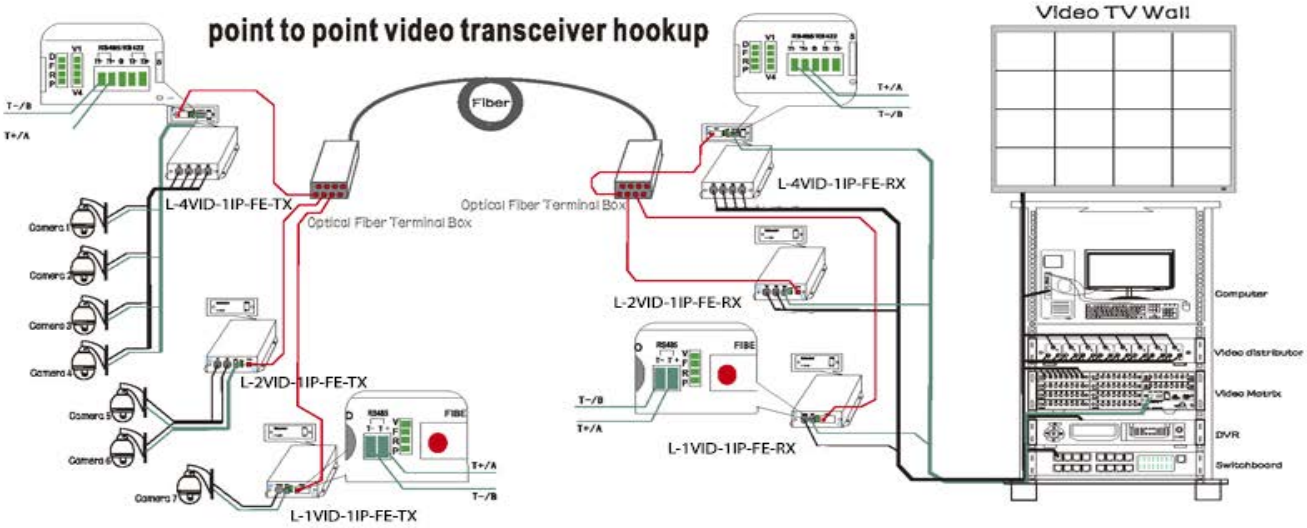

Description

The 1Channel Video + 1-ch reverse Data +10/100M Ethernet optical transceiver adopts the most advanced international technology of digital video and optical fiber transmission, performing synchronous, undistorted, uncompressed and high quality signal transmission over all kinds of optical fiber. This Fiber Optical Transmitter & Receiver can be easily used in the normal operation by virtue of LED indication of working status, and without any electric or optical regulation on site. It can be installed independently or installed in 4U rack.

General Features:

◆Card-type or Stand-alone type for your choice; suitable for concentration management in 4U Racks

- ◆ 10 –digit coding and non-compression video transmission
- ◆ supporting any high –resolution video signal
- ◆ automatically compatible with PAL, NTSC and SECAM video format
- ◆ Supporting video intact regenerative relay, the video transmission can be reach above 200km
- ◆ Supporting advanced SNMP standards, realise long-distance web-controlling
- ◆ LED indication of power and other parameter status, monitoring real-time operation
- ◆ Modularized and industrialized design ensuring reliability and flexibility

Target Industries:

- ◆ Intelligent transportation supervisory system（ITS）
- ◆ High-speed Way supervisory/Tele-Communication System
- ◆ Security protection system, TV medical treatment
- ◆ Long-distance Muti-media Schooling, Campus monitoring
- ◆ Long-distance broadcast television transmission system
- ◆ High-building Security Protection, Military Tele-Com projects

Fiber Features:(the fiber optic connectors usually is FC, can order ST)

Type	wavelength (nm)	TX power dBm	Transmission Distance Km	Lose dBm/Km	Fiber Type
Single-mode	1310	-8~-5	0~20	0.5	Single-mode(9/125um)

Video Features:

Video Interface: BNC
Video input/output impedance: 75Ω (unbalanced)
Video input/output Voltage: 1VP - P (peak value),Max 1.2Vpp
Video Bandwidth: 10MHz
Video sampling: 15MHz high speed sampling
Video digit bit width: 10/12 bit
Differential gain: （ 10%-90%APL） DG <1%(Typical value)

Differential phase: （ 10%-90%APL） DP <0.8°(Typical value)
Video SNR: S/N ≥ 70dB （Maximum optical link path loss）

Data Features:

Applications: supporting 1-ch reverse data, compatible with all kinds of Keyboard, ,DVR , alarm data industrial application transmission
Interface: standard industrial connecting terminals
Controlling Equipments: PTZ decoder, Keyboard , High speed dome camera, industrial equipments
Interface Signals: RS-485(2 lines)

Communication speed rate: 0~512Kbps (speed autoadaptation, no need to adjust)

Ethernet Features

Interface Speed Rate: 10/100Mbit/s Auto-adaptation, the default is 100MBPS working condition
Interface Type: RJ-45
Supporting Agreements: IEEE802.3U 100Base-TX, 10/100M
Communication Working format: Full-duplex or half-duplex

General Parameter:

Operating Temperature: -40 ℃～+85 ℃
Storage Temperature: -45 ℃～+95 ℃
Relative humidity: 0～95% (Non-condensing)
Power Voltage: AC85-260v/50Hz
MTBF: ≥10^5 hours
Power supplier: 3.5 w（Input:DC5V 1500mA）

Order Information: **（Packed in standalone and card type,Card-type is suitable for the 4U Rack）**

Type Numbe	Specification (Interface:ST)	Max Transmission Distance (KM)
L-1VID-1IP-FE-TX-RX	1 Video +1 Reverse Data+ 100M Ethernet	20 KM（Single-mode）

Note: The interface can be ST or FC, according to the different requirements from customers. The installation size please Go refer in the application instructions.

Safety Instructions

Read before operating equipment.

1. Cleaning - Unplug this product from the wall outlet before cleaning. Do not use liquid cleaners or aerosol cleaners. Use a damp cloth for cleaning.
2. Power Sources - Use supplied or equivalent UL/CSA approved low voltage DC plug-in transformer.
3. Outdoor Antenna Grounding - If you connect an outside antenna or cable system to the product, be sure the antenna or cable system is grounded so as to provide some protection against voltage surges and built-up static charges. Section 810 of the National Electrical Code, ANSI/NFPA No. 70, provides information with respect to proper grounding of the mast and supporting structure, grounding of the lead-in wire to an antenna discharge unit, size of grounding conductors, location of antenna discharge unit, connection to grounding electrodes, and requirements for the grounding electrode.
4. Lightning - Avoid installation or reconfiguration of wiring during lightning activity.
5. Power Lines - Do not locate an outside antenna system near overhead power lines or other electric light or power circuits or where it can fall into such power lines or circuits. When installing an outside antenna system, refrain from touching such power lines or circuits, as contact with them might be fatal.
6. Overloading - Do not overload wall outlets and extension cords as this can result in a risk of fire or electric shock.
7. Object and Liquid Entry - Never push objects of any kind into this product through openings as they may touch dangerous voltage points or short out parts, resulting in a fire or electric shock. Never spill liquid of any kind on the product.
8. Servicing - Do not attempt to service this product yourself as opening or removing covers may expose you to dangerous voltage or other hazards. Refer all servicing to qualified service personnel.
9. Damage Requiring Service - Unplug this product from the wall outlet and refer servicing to qualified service personnel under the following conditions:
   - When the power supply cord or plug is damaged.
   - If liquid spills or objects fall into the product.
   - If the product is exposed to rain or water.
   - If the product does not operate normally by following the operating instructions. Adjust only those controls that are covered by the operating instructions. An improper adjustment of other controls may result in damage and will often require extensive work by a qualified technician to restore the product to its normal operation.
   - If the video product is dropped or the cabinet is damaged.
   - When the video product exhibits a distinct change in performance, this indicates a need for service.