QUESTTEL
Broadcast Systems

# 8 Ch RF DVB to IP Gateway - CATV over IP SPTS

# User Manual

## 1B-RF-IP-SPTS-GW

# DIRECTORY

CHAPTER 1 PRODUCT OUTLINE ..... 1

1.1 Outline ..... 1

1.2 Features ..... 1

1.3 Specifications ..... 2

1.4 Inner Principle ..... 2

1.5 Appearance and Description ..... 2

CHAPTER 2 INSTALLATION GUIDE ..... 4

2.1 Acquisition Check ..... 4

2.2 Installation Preparation ..... 4

2.3 Wire's Connection ..... 6

CHAPTER 3 OPERATION ..... 8

3.1 Initializing ..... 8

3.2 General Setting ..... 9

CHAPTER 4 TROUBLESHOOTING ..... 18

# Chapter 1 Product Outline

## 1.1 Outline

1B-RF-IP-SPTS-GW Tuner to SPTS IP Gateway is a head-end interface conversion device which is used for DVB, ASI and Ethernet. It supports 32xSPTS output. It is also integrated with tuner demodulation and gateway function, which can demodulate the signal from 8 tuners into TS. After multiplexing the TS, then packet the TS into IP package and output the IP package through different IP address and ports. It supports IP output (UDP protocol).

## 1.2 Features

- Integrated with demodulation and gateway function
- Support 8 channels tuner (DVB-S/S2/C/T/ISDB-T optional) input and 32xSPTS output.
- Support MPEG-2 and MPEG-4 TS to IP one way conversion
- 1 GE output(support parallel 1 Gbps data output channel)
- Support maximum 8 tuner to IP converting channel, the maximum output bit-rate is 800Mbps
- Support TS over UDP protocol, unicast and multicast
- Support LCD display and keyboard
- Support SNMP operation

## 1.3 Specifications

| | | |
|---|---|---|
| **Interface** | Input | 8 Channels tuner input(DVB-S/S2 /C/T/ISDB-T optional) |
| | Output | 1 GE output, UDP protocol, unicast and multicast |
| **Transmission Bit-rate** | | Maximum total bit-rate is 800Mbps |
| **General** | Dimension (WxLxH) | 482mm×410mm×44mm |
| | Weight | 3.6kg |
| | Temperature | 0~45℃(working)，-20~80℃(storage) |
| | Power supply | 100~240VAC，50/60Hz |
| | consumption | 20W |

## 1.4 Inner Principle

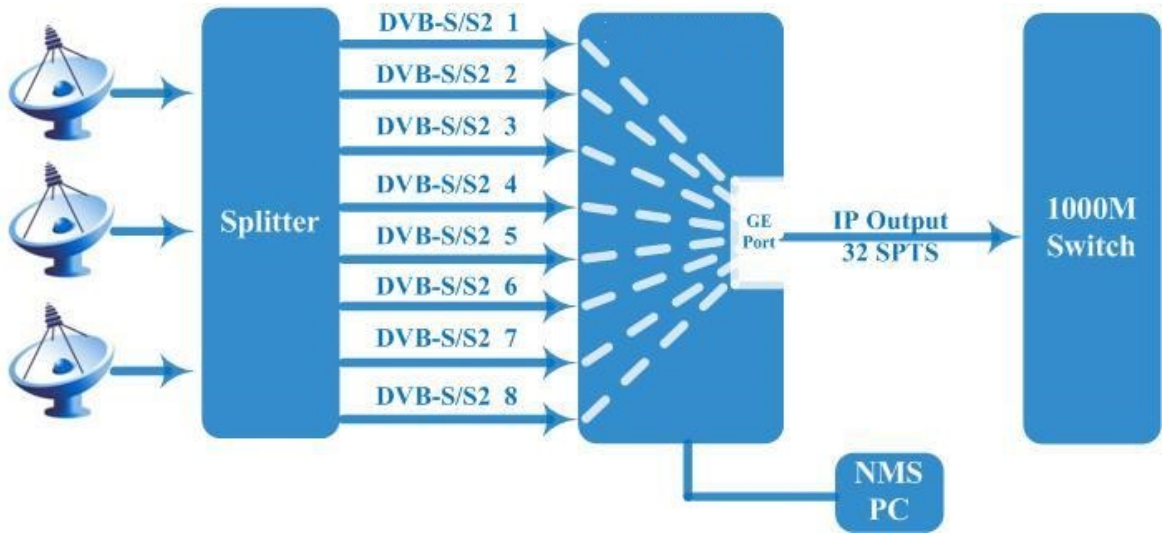


## 1.5 Appearance and Description

Front Panel Illustration:

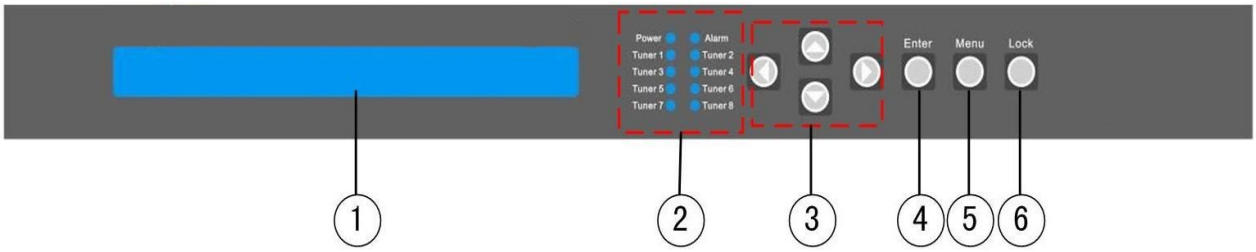


| | | |
|---|---|---|
| 1 | LCD Display | |
| 2 | Tuner in | Power Indicator |
| | | Alarm Indicator |
| | | Tuner 1(2/3…/8): when the input signal of tuner 1(2/3…/8) is locked, the light becomes green. Otherwise it is red. |
| 3 | Up (▲)/Down (▼) / Left (◀)/Right (▶) button | |
| 4 | Enter | |
| 5 | Menu | |
| 6 | Lock | |

## Rear Panel Illustration

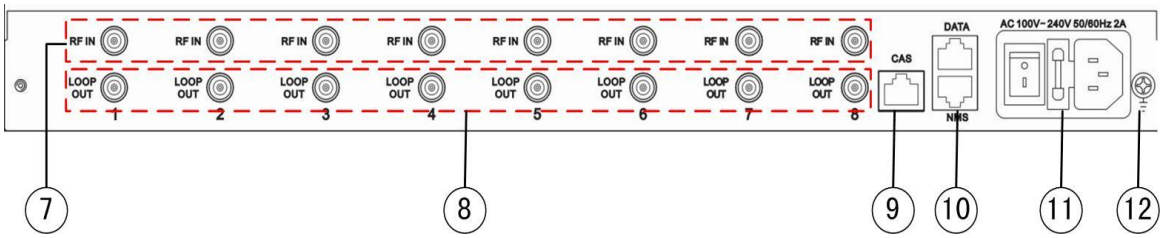


| | |
|---|---|
| 7 | 8 channels RF IN Interface |
| 8 | DVB Loop Out Interface |
| 9 | CAS port: Network management interface |
| 10 | NMS port: Network management interface<br>Data port: IP out port |
| 11 | Integrated power switch and socket |
| 12 | Grounding rod |

# Chapter 2 Installation Guide

## 2.1 Acquisition Check

When users open the package of the device, it is necessary to check items according to packing list. Normally it should include the following items:

- 1B-RF-IP-SPTS-GW Tuner to SPTS IP Gateway
- User's Manual
- Grounding Cable
- RF In and Loop Out Cable
- Power Cord

If any item is missing or mismatching with the list above, please contact local dealer.

## 2.2 Installation Preparation

When users install device, please follow the below steps. The details of installation will be described at the rest part of this chapter. Users can also refer rear panel chart during the installation.

The main content of this chapter including:

- Checking the possible device missing or damage during the transportation
- Preparing relevant environment for installation
- Installing gateway
- Connecting signal cables
- Connecting communication port (if it is necessary)

### 2.2.1 Device's Installation Flow Chart Illustrated as following:

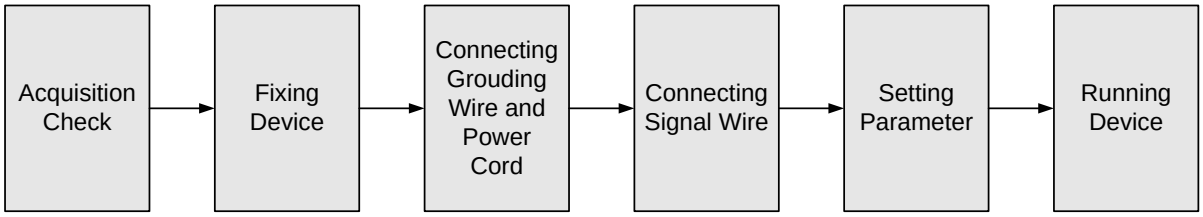


### 2.2.2 Environment Requirement

| Item | Requirement |
|---|---|
| Machine Hall Space | When user installs machine frame array in one machine hall, the distance between 2 rows of machine frames should be 1.2~1.5m and the distance against wall should be no less than 0.8m. |
| Machine Hall Floor | Electric Isolation, Dust Free<br>Volume resistivity of ground anti-static material: $1X10^{7}$~$1X10^{10\Omega}$, Grounding current limiting resistance: 1M (Floor bearing should be greater than 450Kg/m²) |
| Environment Temperature | 5~40℃(sustainable ), 0~45℃(short time),<br>installing air-conditioning is recommended |
| Relative Temperature | 20%~80% sustainable 10%~90% short time |
| Pressure | 86~105KPa |
| Door & Window | Installing rubber strip for sealing door-gaps and dual level glasses for window |
| Wall | It can be covered with wallpaper, or brightness less paint. |
| Fire Protection | Fire alarm system and extinguisher |
| Power | Requiring device power, air-conditioning power and lighting power are independent to each other. Device power requires AC power 100V-240V 50/60Hz 2A. Please carefully check before running. |

### 2.2.3 Grounding Requirement

- All function modules' good grounding designs are the basis of reliability and stability of devices. Also, they are the most important guarantee of lightning arresting and interference rejection. Therefore, the system must follow this rule.
- Coaxial cable's outer conductor and isolation layer should keep proper electric conducting with the metal housing of device.
- Grounding conductor must adopt copper conductor in order to reduce high frequency impedance, and the grounding wire must be as thick and short as possible.
- Users should make sure the 2 ends of grounding wire well electric conducted and be antirust.
- It is prohibited to use any other device as part of grounding electric circuit
- The area of the conduction between grounding wire and device's frame should be no less than 25mm$^2$.

### 2.2.4 Frame Grounding

All the machine frames should be connected with protective copper strip. The grounding wire should be as short as possible and avoid circling. The area of the conduction between grounding wire and grounding strip should be no less than 25mm$^2$.

### 2.2.5 Device Grounding

Connecting the device's grounding rod to frame's grounding pole with copper wire.

## 2.3 Wire's Connection

The grounding wire conductive screw is located at the right end of rear panel, and the power switch, fuse, power supply socket is just beside ,whose order goes like this, power switch is on the left ,power supply socket is on the right and the fuse is just between them.

- **Connecting Power Cord**

  User can insert one end into power supply socket, while insert the other end to AC power.
- **Connecting Grounding Wire**

  When the device solely connects to protective ground, it should adopt independent way, say, share the same ground with other devices. When the device adopts united way, the

grounding resistance should be smaller than 1Ω.

---

☞**Caution:**

**Before connecting power cord to 1B-RF-IP-SPTS-GW Tuner to SPTS IP Gateway, user should set the power switch to "OFF"**.

---

# Chapter 3 Operation

1B-RF-IP-SPTS-GW Tuner to SPTS IP gateway's front panel is user operation interface. Before operation, user can decide whether directly use the default setting or customize the input and output parameters setting. The detail operations go as follows:

### Keyboard Function Description:

**MENU**: Canceling presently entered value, resuming previous setting; Return to previous menu.

**ENTER**: Activating the parameters which needs modify, or confirming the change after modification.

**LEFT/RIGHT**: To choose and set the parameters.

**UP/DOWN**: Modifying activated parameter or paging up/down when parameter is inactivated.

**LOCK**: Lock the screen / cancel the lock state. After pressing lock key, the system will question the users to save present setting or not. If not, the LCD will display the current configuration state.

At the "Resume Factory Setting" page, user can firstly press "ENTER" key, consequently system resumes factory parameter setting.

## 3.1 Initializing

After the device is powered on, the screen will display the system's stand-by interface. Information about channel number, signal type and etc. will be displayed alternatively in the second row. It is shown as follows:

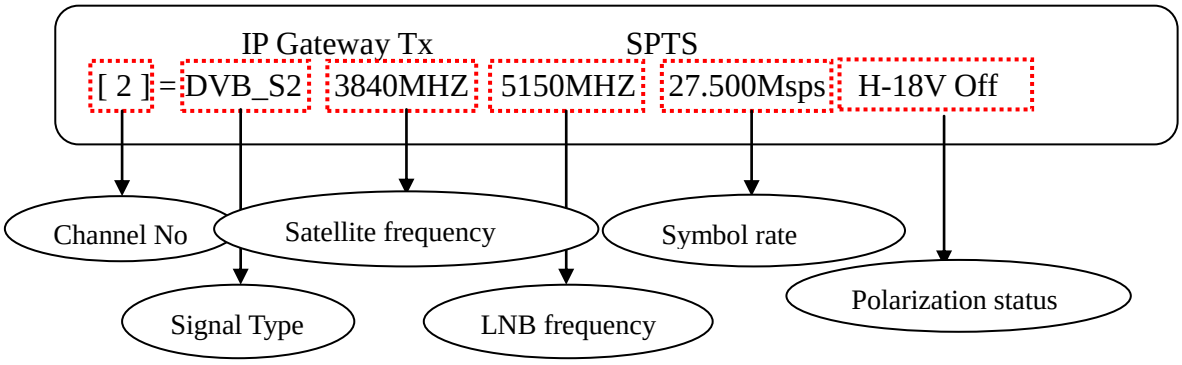

## 3.2 General Setting

To access the main menu, press the LOCK key. The following screen is displayed.

```
►1 Alarm Status          2 Input Setting
 3 Output Setting        4 Network Setting
```

```
► 5 Saving Config        6 Loading Config
  7 Version(SNMP)
```

Herein, by pressing “ENTER”, users can enter into each submenu to set parameters of input channel, device output, network and so on.

### 3.2.1 Alarm Status

To access the Alarm Status menu from the main menu, press the Enter key. The following screen is displayed and user can check the Alarm count status.

```
Alarm Status
Alarm count 0
```

### 3.2.2 Input Setting

To access the tuners’ setting menu from the input setting menu, press the Enter key. The following screen is displayed.

```
►2.1 Tuner 1 Setting     2.2 Tuner 2 Setting
 2.3 Tuner 3 Setting     2.4 Tuner 4 Setting
```

```
►2.5 Tuner 5 Setting     2.6 Tuner 6 Setting
 2.7 Tuner 7 Setting     2.8 Tuner 8 Setting
```

Under this interface, users can use UP or DOWN keys to select channel, and press Enter to go to the relevant submenu for setting parameters.

#### 3.2.2.1 Tuner 1 Setting

Hereby this manual will take 2.1 Tuner 1 to illustrate the configuration of parameters.

To access the submenu from tuner 1 setting menu, press the Enter key. The following screen is displayed.

```
▶2.1.1 Satellite fre          2.1.2 LNB fre
 2.1.3 Symbol rate            2.1.4 Polarization
```

```
▶2.1.5 22KHZ switch
```

User could check and set the satellite frequency, LNB frequency and symbol rate of its corresponding submenu “2.1.1”, “2.1.2”, “2.1.3” by pressing Enter to go to editing mode, then set cursor location by pressing Left and Right, modifying figures by pressing UP and DOWN. After modification finished, users press ENTER to exit editing mode and press UP and DOWN to turn page for other parameters modification.

```
2.1.1 Satellite fre
      03840 MHz
```

```
2.1.2 LNB fre
     05150 MHz
```

```
2.1.3 Symbol rate
     27.500 Msps
```

Likely, at the submenu2.1.4, users can check the current LNB Voltage (mark with symbol “[ ]”) and switch it as needed.

```
2.1.4 Polarization
                    H-18v
```

```
2.1.4 Polarization
    V-13v          [H-18v]          Off-0v
```

And at 2.1.5, users can decide whether to enable or disable the 22 KHz Switch.

```
2.1.5 22KHZ switch
    [Off]                 On
```

#### 3.2.2.1 Tuner 2/3/…/8 Setting

The principle of setting tuner 2/3/…/8 is the same with that of Tuner 1 setting.

### 3.2.3 Output Setting

Back to the main menu and press Enter key to access the following submenus from the output setting.

| | |
|---|---|
| ►3.1 SPTS Config | 3.2 SPTS IP Addr |
| 3.3 SPTS Gateway | 3.4 SPTS Enable |

►3.5 SPTS Para Prg

#### 3.2.3.1 SPTS Configuration

To access the submenu 3.1 Output Enable from SPTS Configuration menu, press the Enter key. The following screen is displayed.

3.1 Output Enable
1 CCTV-1 → By pressing UP/DOWN button after entering this interface, user can see 32 programs in turn.

To access the submenu 3.1.1 IP Address Set from 3.1 Output Enable menu, press the Right key. The following screen is displayed.

3.1.1 IP Addr Set
< 224.002.002.002 → Device supports multicast under this IP address and unicast under the IP address 192.168.xxx.xxx

To access the submenu 3.1.2 IP Port Set from 3.1.1 IP Address Set menu, press the Right key. The following screen is displayed.

3.1.1 IP Port Set
< 01007

To access the menu 3.1 Enable Select from 3.1 Output Enable menu, press the Enter key. The following screen is displayed.

3.1 Enable Select
►ON OFF → User can select ON/OFF to output the program through the DATA port.

### 3.2.3.2 SPTS IP Address

To access the 3.2 SPTS IP Address menu, press the Enter key. The following screen is displayed.

```
SPTS IP Addr
    192.168.003.137
```

### 3.2.3.3 SPTS Gateway

To access the 3.3 SPTS Gateway menu, press the Enter key. The following screen is displayed.

```
SPTS Gateway
    192.168.003.001
```

### 3.2.3.4 SPTS Enable

To access the 3.4 SPTS Enable menu, press the Enter key. The following screen is displayed.

```
SPTS Enable
 ►ON        OFF
```

User can turn ON/OFF button to enable or disable the SPTS output function.

### 3.2.3.5 SPTS Para Program

To access the submenu from 3.5 SPTS Program parse menu, press the Enter key. The following screen is displayed.

```
► Tuner 1 Setting        Tuner 2 Setting
  Tuner 3 Setting        Tuner 4 Setting
```

```
►Tuner 5 Setting         Tuner 6 Setting
 Tuner 7 Setting         Tuner 8 Setting
```

Hereby this manual will take Tuner 1 to illustrate the program parsing, multiplexing selecting and deleting.

To access Tuner 1 Setting menu, press Enter key. The following screen is displayed.

| | |
|---|---|
| ►Parse Program | Mux Program Select |
| Delete All Program | |

To access Parse Program menu, press Enter key. The following screen is displayed.

Resolving Channel 1 Prg Please Wait……..

Resolve Prg Finish
Total Prg 0 → After finishing the parsing process, it will show the amount of parsed programs from channel 1 here.

To access Mux Program Select menu, press Enter key. The following screen is displayed.

1 CCTV-1 √ → By pressing UP/DOWN key, user can see all the parsed programs from channel 1 in turn. User can decide whether to multiplex each program by switching the symbols " √ " and "×". The amounts of multiplexed programs are equal to the amount of symbols"√".

To access Delete All Program menu, press Enter key. The following screen is displayed.

Deleting…… → Delete all the multiplexed programs.

The principle of setting tuner 2/3/…/8 is the same with that of Tuner 1 setting.

### 3.2.4 Network setting

To access the network setting menu, press Enter key. The following screen is displayed.

| | |
|---|---|
| 4.1 IP Address | 4.2 Subnet Mask |
| 4.3 Gateway | 4.4 Console Address |

4.5 MAC Address

**Note: The MAC address is as the factory setting, and it's unique.**

Under the following submenus, there are parameters which can be set manually; user can press "Up/Down" to choose this item. "Enter" and "Left/Right" to set the parameters. The

system displays following pages.

```
4.1 IP Address
    192.168.005.113
```

```
4.2 Subnet Mask
    255.255.255.000
```

```
4.3 Gateway
    192.168.004.137
```

```
4.4 Console Address
    000.000.000.000
```

```
4.5 MAC Address
    ffffffffffffffffffff
```

### 3.2.5 Saving Configuration

To access the Saving Configuration menu to save the current configured parameters, press Enter key. The following screen is displayed.

```
Saving, please wait:
Erasing…….
```

After saving finished, the menu automatically turns back.

### 3.2.6 Loading configuration

The system can load two kinds of configurations. One is customer saved configurations; the other is factory default configuration.

```
6.1 Load Saved CFG          6.2 Load Default CFG
```

Under the corresponding menu, Users press ENTER to choose configuration needing load.

```
Loading, please wait:
>>>>>>>>>>>>>>>>>
```

After loading finished, the menu automatically turns back.

### 3.2.7 Version (SNMP)

To view the software and hardware version, press Enter key. The following screen is displayed.

```
SW    1.06          HW    1.0
```

# Chapter 4 Troubleshooting

## Prevention Measure

- Installing the device at the place in which environment temperature between 0 to 45 °C
- Making sure good ventilation for the heat-sink on the rear panel and other heat-sink bores if necessary
- Checking the input AC within the power supply working range and the connection is correct before switching on device
- Checking the RF output level varies within tolerant range if it is necessary
- Checking all signal cables have been properly connected
- Frequently switching on/off device is prohibited; the interval between every switching on/off must greater than 10 seconds.

## Conditions need to unplug power cord

- Power cord or socket damaged.
- Any liquid flowed into device.
- Any stuff causes circuit short
- Device in damp environment
- Device was suffered from physical damage
- Longtime idle.
- After switching on and restoring to factory setting, device still cannot work properly.