QUESTTEL
Broadcast Systems

QAM HD Integrated Receiver Decoder with SDI/HDMI/ASI/IP Signal Outputs

User Manual

B-IRD-HD-PRO-Q HD IRD

DIRECTORY

Chapter 1 Product Outline

1.1 Outline

B-IRD-HD-PRO-Q HD IRD is QuetTel new designed IRD with video monitoring LCD equipped on the front panel, which can decode TS signals from ASI, tuner (supporting QAM) or IP sources into audio and video signal. With the help of CAM module, it can multiplex and de-encrypt the whole TS stream, then give it to ASI, IP as well as various interface video/audio output at the same time. And therefore, its video/audio outputs support professional HD/SD-SDI, YPbPr, HDMI, XLR balanced audio, and S/PDIF digital audio and CVBS, which could greatly satisfy the professional users' needs. B-IRD-HD-PRO-Q can support one channel (Tuner, ASI or IP) de-scrambling and give transparent signal output. User can operate the device by using front panel LCD or NMS software. Moreover, user can choose to have an optional ASI output interface which can pass through the encryption data source directly from tuner.

1.2 Features

- Adopt powerful processor.
- Support LCD monitoring.
- High reliability and excellent operation stability.
- Support Cam Card insert.
- MPEG-2&MPEG4 Part 10 decoding.
- Re-multiplexer and descrambler embedded.
- It is fully compatible with H.264 (MPEG-4 Part 10) and MPEG-2, in compliance with DVB standard and support MP@HL and MP@ML.
- Equipped with ASI input, supporting cascade.
- Support 4 ASI, 1 CVBS, 1 YPbPr, 1 HD/SD-SDI, 1 XLR and RCA, 1 S/P DIF audio, 1 HDMI HD multimedia and IP output, 1 USB output(software updating)
- Compatible for both HD and SD, supporting audio embedding.
- Support output HD 1080I, 720P, SD PAL/NTSC.

- PAL/NTSC identified automatically.
- Two CI Slot PCMCIA interfaces.
- Two independent CAM modules, supports maximum 8 programs decryption in each channel.
- Support BISS “mode **1**” and “mode **E**”
- Support RJ-45 interface, NMS, TCP/IP network protocol.
- Support program memory function in condition of power off.
- Support subtitle, teletext function.
- User friendly operation interface and convenient operation menu system.
- Support LCD display and button operation.
- User can edit various data from satellite and repeaters.
- Support 1 ASI input, tuner input (supporting DVB-S/S2), IP input(UDP)
- Support DVB-S/S2 demodulation.

1.3 Specifications

Input Interface	Tuner	1 tuner(DVB-S/S2)
	ASI	1 ASI IN
	IP	1 IP
Output Port	ASI Output	2 groups separate output ports (each group has 2 channels)
	Video Output	1xCVBS, 1xYPbPr, 1xHD/SD-SDI, 1 x HDMI
	Audio Output	XLR, L/R
	SPDIF Output	1 SPDIF
Input Level	-65～-25dBm	
Input Frequency	950~2150MHz	
Symbol Rate	2-45M symbols	
Constellation	QPSK, 8PSK	
FEC Code Rate	1/2, 3/5, 2/3, 3/4,4/5, 5/6, 8/9,9/10	
NMS Port	Ethernet Port	10/100M
	Protocols	TS Over IP : UDP, NMS : UDP
Miscellaneous	Dimensions (L×W×H)	482mm*360mm*44mm
	Approx weight	3.2kg
	Power	<20W(Max)
	Temperature	0~45℃(Operating), -20~80℃(Storage)

1.4 Principle Chart

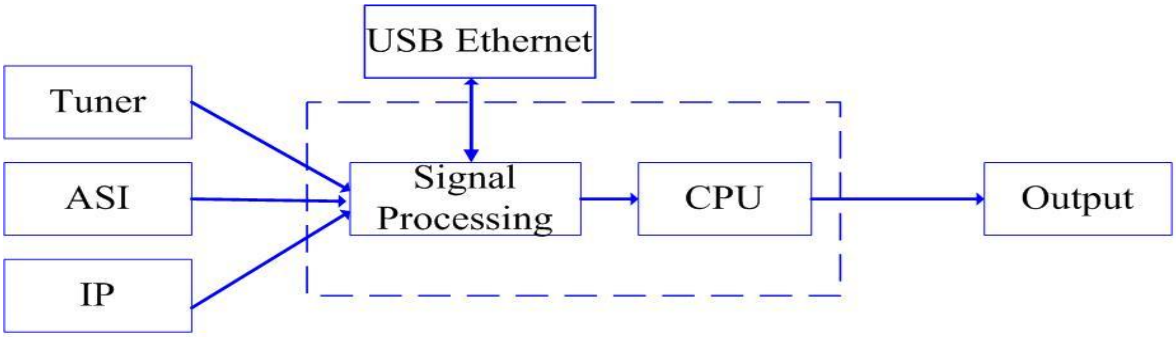

1.5 Appearance and description

Front Panel Illustration:

Indicators area: The indicators will light on when the HD IRD works at its current mode.

1	LCD Display
2	Alarm Indicator
3	Power Indicator
4	Up/Down/Left/Right Buttons
5	Enter-confirming Key
6	Menu Key
7	Lock Key Indicator
8	LCD Monitor
9	Switch Button
10	PCMCIA interface

Rear Panel Illustration

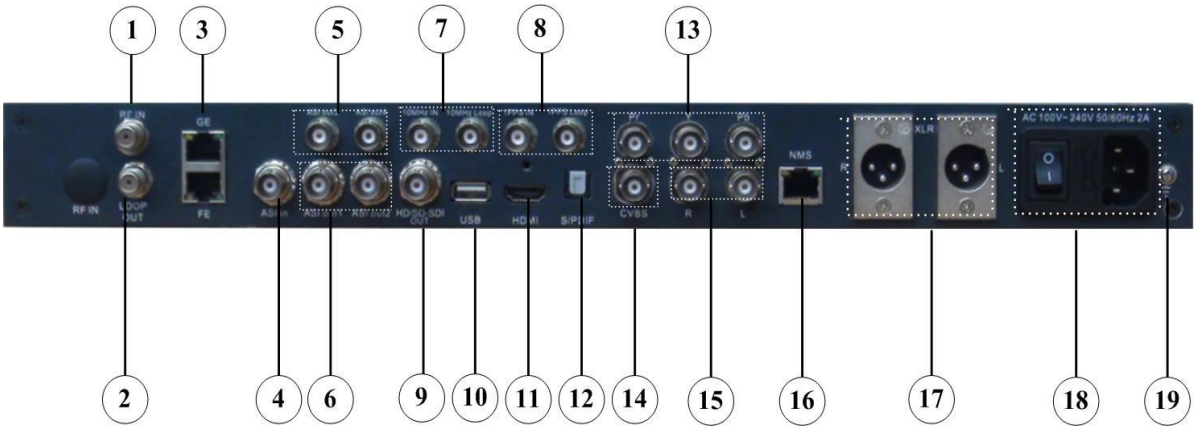

1	RF IN Interface
2	DVB-S/S2 Loop Out Interface
3	IP IN/OUT Interface
4	ASI IN Interface
5	ASI Out3 and ASI Out4 Interface: Output Single TS Stream from tuner.
6	ASI Out1 and ASI Out2 Interface: Output multiplexed or separated TS Stream from tuner, ASI and IP.
7	10MHz IN and 10MHz LOOP interface
8	1PPS IN and 1PPS LOOP interface
9	HDSDI-OUT Interface: HD/SD digital parallel output interface
10	USB interface: Software updating.
11	HDMI Output Interface
12	SPDIF: Digital audio output interface
13	YPbPr: Audio and Video component output interface
14	CVBS: Composite video and audio output interface
15	Audio (L/R channel) output interface
16	NMS Ethernet Port(10-100Mbps)
17	Balance audio output interface
18	Integrated power switch and socket
19	Grounding Wire

Chapter 2 Installation Guide

2.1 Acquisition Check

When user opens the package of the device, it is necessary to check items according to packing list. Normally it should include the following items:

- B-IRD-HD-PRO-Q HD IRD 1pcs
- User's Manual 1pcs
- Power Cord 1pcs
- XLR Interface Cable 2pcs
- RF In and Loop Out Cable 1pcs
- Component Output, CVBS Output and Sound Channel Output Cable 3pcs
- ASI Input and Output Cable 1pcs

If any item is missing or mismatching with the list above, please contact our company.

2.2 Installation Preparation

When users install device, please follow the below steps. The details of installation will be described at the rest part of this chapter. Users can also refer rear panel chart during the installation.

The main content of this chapter includes:

- Checking the possible device missing or damage during the transportation
- Preparing relevant environment for installation
- Installing HD IRD
- Connecting signal cables
- Connecting communication port (if it is necessary)

2.2.1 Device's Installation Flow Chart Illustrated as following：

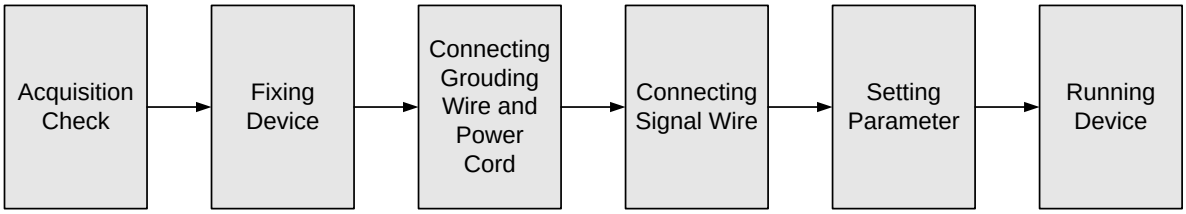

2.2.2 Environment Requirement

Item	Requirement
Machine Hall Space	When user installs machine frame array in one machine hall, the distance between 2 rows of machine frames should be 1.2~1.5m and the distance against wall should be no less than 0.8m.
Machine Hall Floor	Electric Isolation, Dust Free Volume resistivity of ground anti-static material: $1X10^{7}$~$1X10^{10\Omega}$，Grounding current limiting resistance: 1M (Floor bearing should be greater than 450Kg/㎡)
Environment Temperature	5~40℃(sustainable)，0~45℃(short time)， installing air-conditioning is recommended
Relative Humidity	20%~80% sustainable 10%~90% short time
Pressure	86~105KPa
Door & Window	Installing rubber strip for sealing door-gaps and dual level glasses for window
Wall	It can be covered with wallpaper, or brightness less paint.
Fire Protection	Fire alarm system and extinguisher
Power	Requiring device power, air-conditioning power and lighting power are independent to each other. Device power requires AC power 100-240V 50-60Hz 2A. Please carefully check before running.

2.2.3 Grounding Requirement

- All function modules' good grounding is the basis of reliability and stability of devices.

Also, they are the most important guarantee of lightning arresting and interference rejection. Therefore, the system must follow this rule.

- Coaxial cables outer conductor and isolation layer should keep proper electric conducting with the metal housing of device.
- Grounding conductor must adopt copper conductor in order to reduce high frequency impedance, and the grounding wire must be as thick and short as possible.
- Users should make sure the 2 ends of grounding wire well electric conducted and be antirust.
- It is prohibited to use any other device as part of grounding electric circuit
- The area of the conduction between grounding wire and device's frame should be no less than 25mm^2.

2.2.4 Frame Grounding

All the machine frames should be connected with protective copper strip. The grounding wire should be as short as possible and avoid circling. The area of the conduction between grounding wire and grounding strip should be no less than 25mm^2.

2.2.5 Device Grounding

Connecting the device's grounding rod to frame's grounding pole with copper wire.

2.3 Wire's Connection

The grounding wire conductive screw is located at the right end of rear panel, and the power switch, fuse, power supply socket is just beside ,whose order goes like this, power switch is on the left ,power supply socket is on the right and the fuse is between them.

- Connecting Power Cord

User can insert one end into power supply socket, while insert the other end to AC power.

- Connecting Grounding Wire

When the device solely connects to protective ground, it should adopt independent way, say, share the same ground with other devices. When the device adopts united way, the

grounding resistance should be smaller than 1Ω.

☞**Caution:**

Before connecting power cord to B-IRD-HD-PRO-Q HD IRD, user should set the power switch to "OFF".

2.4 Signal Cable Connection

The signal connections include the connection of input signal cable and the connection of output signal cable. The details are as follows:

2.4.1 B-IRD-HD-PRO-Q HD IRD Cables Illustration:

- **IP Input Cable Illustration:**

- **HDMI Cable Illustration**

- **XLR Interface Cable Illustration:**

- **RF In and Loop Out Cable Illustration:**

- **Component Output, CVBS Output and Sound Channel Output Cable Illustration:**

- **ASI Input and Output Cable Illustration:**

1PPS & 10MHz Input and Loop-out Cable Illustration

2.4.2 B-IRD-HD-PRO-Q HD IRD Satellite Receiver Signal Cable Connection Illustration:

- **RF IN and LOOP OUT Connection Illustration:**

Users can find the RF IN and LOOP OUT interface on the device according to the connector mark described on the rear panel illustration, and then connect the cable. One end is connected to the RF IN interface of satellite receiver while the other end is connected to the satellite signal source equipment or LOOP OUT interface of the previous satellite receiver when several satellite receivers are series connection. As follows:

- **ASI IN and ASI OUT Connection Illustration:**

Users can find the ASI IN and ASI OUT interface on the device according to the connector mark described on the rear panel illustration, and then connect the cable. One end is connected to ASI IN interface of the HD IRD, the other end is connected to any device that has ASI output, while when connected ASI OUT interface, the other end of the wire is

generally connected to encoder and multiplexer. As follows:

- **Component Output, CVBS Output and Sound Channel Output Connection Illustration:**

Users can find the YPbPr, CVBS and Left/Right sound channel interface on the device according to the connector mark described on the rear panel illustration, and then connect the cable. The other end of the wire is connected to encoders.

- **HDMI Output Connection Illustration:**

Users can find the HDMI interface on the device according to the connector mark described on the rear panel illustration, and then connect the wire. One end of the wire is connected to the HDMI output interface of the HD IRD, while the other end of the wire is connected to encoder or other equipment. As follows:

- **IP Output Connection Illustration:**

Users can find the IP IN/OUTPUT interface on the device according to the connector mark described on the rear panel illustration, and then connect the wire. One end of the wire is connected to the IP input/output interface of the HD IRD, the other end of the wire is connected to devices with IP OUT/INPUT as follows:

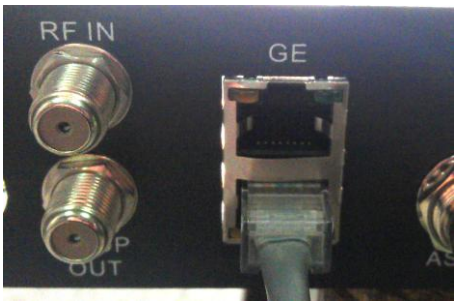

- **XLR Output Connection Illustration:**

Users can find the XLR interface on the device according to the connector mark described on the rear panel illustration, and then connect the wire. One end of the wire is connected to the XLR output interface of the HD IRD, the other end of the wire is connected to IP encoder. As follows:

10MHz IN & 1PPS IN Connection Illustration:

Users can find the 1PPS and 10MHz interfaces on the device according to the connector mark described on the rear panel illustration, and then connect the wires on condition that the SFN solution is involved. One end of the wires is connected to the 1PPS IN and 10MHz IN interfaces of the HD IRD, and the other end of the wires is connected to GPS as follows:

Chapter 3 Operation

The front panel of B-IRD-HD-PRO-Q HD IRD is the user-operating interface and the equipment can be conveniently operated and used by user according to the procedures displayed on the LCD; the simple using method for the machine is as follows:

Keyboard Function Description:

MENU: Cancel current entered value, resume previous setting; Return to previous menu.

ENTER: Activate the parameters which need modifications, or confirm the change after modification.

LEFT/RIGHT: Choose and set the parameters.

UP/DOWN: Modify activated parameter or paging up/down when parameter is inactivated.

LOCK: Locking the screen / canceling the lock state. After pressing lock key, the system will question the users to save present setting or not. If not, the LCD will display the current configuration state.

3.1 Main Interface

Switch on the IRD, the LCD will display the equipment type and current output stream as

shown on the following page,

DVB-S2 BTS HD IRD
Out Stream 00.006Mbps

then pressing the “LOCK” key on the front panel to enter to the main menu as below:

▶ 1 Input Setting
2 Output Setting
3 Decoder Setting
4 Descramble Setting
5 Network Setting
6 Saving Configuration
7 Loading Configuration
8 Version (SNMP)
9 Language

3.2 General Setting

User could do all the settings according to the 9 directions displayed on the LCD.

3.2.1 Input Setting

User can press “Enter” key to enter into the menu of the input setting.

1.1 Tuner (DVB-S2)
1.2 ASI
1.3 IP

3.2.1.1 Tuner In

Here we take 1.1 Tuner (DVB-S2) signal in as an example:

The page menu from 1.1 to 1.3 represents the tuner, ASI and IP input ports of the IRD. User can multiplex the input programs from any port to output any program or all the programs at the same time. By pressing the “Enter” key, the device will take a while to analyze the input TS or signal and then display the program list at the submenu, say, 1.1.1-1.1.6

1.1.1 Prog Parse
1.1.2 Sat Freq Set
1.1.3 LNB Freq Set
1.1.4 Symbol Rate
1.1.5 LNB Voltage
1.1.6 22KHz Switch

By pressing the “Enter” key to enter the submenu of 1.1.1

1.1.1 Prog: 00 Mux: 00

At the submenu 1.1.1, the LCD displays the program number and the count of programs multiplexed.

User also could check and set the satellite frequency, LNB frequency and symbol rate of its corresponding submenu “1.1.2”, “1.1.3”, “1.1.4”.

1.1.2 Sat Freq Set
3840MHZ

1.1.3 LNB Freq Set
5150MHz

1.1.4 Symbol Rate
27500 KHz

At the submenu 1.1.5, user can decide which LNB voltage to apply.

1.1.5 LNB Voltage
Vertical (13V) ◄
Horizontal (18V)
OFF

At the submenu 1.1.6, user can choose to turn on the 22 KHz to search the programs from KU band.

1.1.6 22 KHz Switch
► OFF ON

3.2.1.2 ASI IN

Return to the upper menu to enter into 1.2 ASI IN, and users can view the program number and the count of programs multiplexed.

```
1.2.1 Prog Parse
```

```
Prog: 00          Mux: 00
```

3.2.1.3 IP IN

Entering into 1.3 IP, it displays below page:

```
► 1.3.1 Prog Parse
  1.3.2  Input IP Addr
  1.3.3  Input Port
```

Similarly, 1.3.1 Prog Parse offers the same information with 1.1.1 and 1.2.1.

User also could check and set the input IP address and input port of its corresponding submenu “1.3.2”, “1.3.3”.

```
1.3.2 Input IP Address
          224.002.002.002
```

```
1.2.1 Input port
          1001
```

3.2.2 Output Setting

User can press “Enter” key to enter into below menu of the output setting and set its corresponding parameters or functions under the right submenus.

.

► 2.1 Multiplex Set
2.2 Output Bit rate
2.3 Tran stream ID
2.4 Original/Net ID
2.5 IP Output

3.2.3 Decoder Setting

User can press “Enter” key to enter into below menu of the decoder setting and execute video setting, audio setting, program selecting and search.

► 3.1 Video Setting
3.2 Audio Setting
3.3 Program Select
3.4 Search

3.2.3.1 Video Setting

User can enter into below submenu by pressing the “Enter” key.

► 3.1.1 Resolution
3.1.2 Standard
3.1.3 Subtitle
3.1.4 CC Switch
3.1.5 Finger Switch
3.1.6 Aspect Ratio

Users can select different standard of the Resolution & Standard & Aspect Ratio, and choose whether to turn on or turn off the Subtitle & CC Switch & Finger Switch of their corresponding submenu.

3.2.3.2 Audio Setting

Users can enter into below submenu by pressing the “Enter” key, then select the audio, choose the ES mode (consists of stereo, left channel, right channel) and adjust the volume under submenu 3.2.1, 3.2.2, and 3.2.3.

Also, users can select the Audio SPDIF from “Auto, PCM, Compressed and OFF” under 3.2.4. and choose between “Auto” and “2 Channels” under 3.2.5.

```
► 3.2.1 Audio Select
  3.2.2 ES Mode
  3.2.3 Volume
  3.2.4 Audio SPDIF
  3.2.5 Audio Channel
```

3.2.3.3 Program Select

```
3.3 Program Select
        ► 1     CCTV-1
```

Users can select the inputting programs to encode under this menu by pressing up/down button. Here “1” represents the program number and “CCTV-1” represents the program name.

3.3.3.4 Search

Users can search the quantity of programs after entering this menu.

```
3.4 Search
        Total Programs: 8
```

3.2.4 Descramble Setting

User can press “Enter” key to enter into below menu of the descramble setting. The detailed operation about the descramble function will be explained on the NMS operation part (Chapter 4).

```
► 4.1 Card Setting
  4.2 BISS
```

Enter in 4.1, it shows as follows, and under corresponding submenu, users can select the source of signals, check card information, select programs to be descrambled, and choose

CI bitrate.

```
► 4.1.1 Input Select
  4.1.2 A Card Info
  4.1.3 B Card Info
  4.1.4 Pro Select
  4.1.5 CI Bitrate
```

Under 4.2 BISS menu, users can choose between Mode 1 and Mode E.

```
► 4.2.1 Select Mode
  4.2.2 Mode 1
  4.2.3 Mode E
```

3.2.5 Network Setting

User can press “Enter” key to enter into below menu of the network setting.

```
► 5.1 IP Address
  5.2 Subnet Mask
  5.3 Gateway
  5.4 MAC Address
  5.5 Service IP
```

3.2.6 Saving Config

User can choose to save the current configured parameters by pressing ENTER key. The system displays following page:

```
Saving, please wait:
Erasing…….
```

3.2.7 Loading Config

User can restore the device into the last saved configuration by choosing the menu 7.1”Saved Config”, and also user can restore the device into factory default configuration by choosing the menu 7.2”Default Config”.

7.1 Load Saved CFG
7.2 Default CFG

Loading, please wait:
>>>>>>>>>>>>>>>>

Chapter 4 NMS Setting

Network Management System Profile

Network management system is applied to digital TV equipment operation, control, management and parameters setting, etc. It centralizes digital TV equipment through network. NMS Remote Control Integrated WEB interface to login and remote control from anywhere through any standard modern web browser. The default IP is 192.168.1.136.

Chapter 5 Troubleshooting

All QuestTel's products have been passed the testing and inspection before shipment. To prevent potential hazard, please strictly follow the operation conditions.

Prevention Measure

- Installing the device at the place in which environment temperature between 0 to 45 °C
- Making sure good ventilation for the heat-sink on the rear panel and other heat-sink bores if necessary
- Checking the input AC voltage within the power supply working range and the connection is correct before switching on device
- Checking all signal cables have been properly connected
- Frequently switching on/off device is prohibited; the interval between every switching on/off must greater than 10 seconds.

Conditions need to unplug power cable

- Power cable or socket damaged.
- Any liquid flowed into device.
- Any stuff causes circuit short
- Device in damp environment
- Device was suffered from physical damage
- Longtime idle.
- After switching on and restoring to factory setting, device still cannot work properly.
- Maintenance needed

Safety Instructions

Read before operating equipment.

1. Cleaning - Unplug this product from the wall outlet before cleaning. Do not use liquid cleaners or aerosol cleaners. Use a damp cloth for cleaning.
2. Power Sources - Use supplied or equivalent UL/CSA approved low voltage DC plug-in transformer.
3. Outdoor Antenna Grounding - If you connect an outside antenna or cable system to the product, be sure the antenna or cable system is grounded so as to provide some protection against voltage surges and built-up static charges. Section 810 of the National Electrical Code, ANSI/NFPA No. 70, provides information with respect to proper grounding of the mast and supporting structure, grounding of the lead-in wire to an antenna discharge unit, size of grounding conductors, location of antenna discharge unit, connection to grounding electrodes, and requirements for the grounding electrode.
4. Lightning - Avoid installation or reconfiguration of wiring during lightning activity.
5. Power Lines - Do not locate an outside antenna system near overhead power lines or other electric light or power circuits or where it can fall into such power lines or circuits. When installing an outside antenna system, refrain from touching such power lines or circuits, as contact with them might be fatal.
6. Overloading - Do not overload wall outlets and extension cords as this can result in a risk of fire or electric shock.
7. Object and Liquid Entry - Never push objects of any kind into this product through openings as they may touch dangerous voltage points or short out parts, resulting in a fire or electric shock. Never spill liquid of any kind on the product.
8. Servicing - Do not attempt to service this product yourself as opening or removing covers may expose you to dangerous voltage or other hazards. Refer all servicing to qualified service personnel.
9. Damage Requiring Service - Unplug this product from the wall outlet and refer servicing to qualified service personnel under the following conditions:
- When the power supply cord or plug is damaged.
- If liquid spills or objects fall into the product.
- If the product is exposed to rain or water.
- If the product does not operate normally by following the operating instructions. Adjust only those controls that are covered by the operating instructions. An improper adjustment of other controls may result in damage and will often require extensive work by a qualified technician to restore the product to its normal operation.
- If the video product is dropped or the cabinet is damaged.
- When the video product exhibits a distinct change in performance, this indicates a need for service.